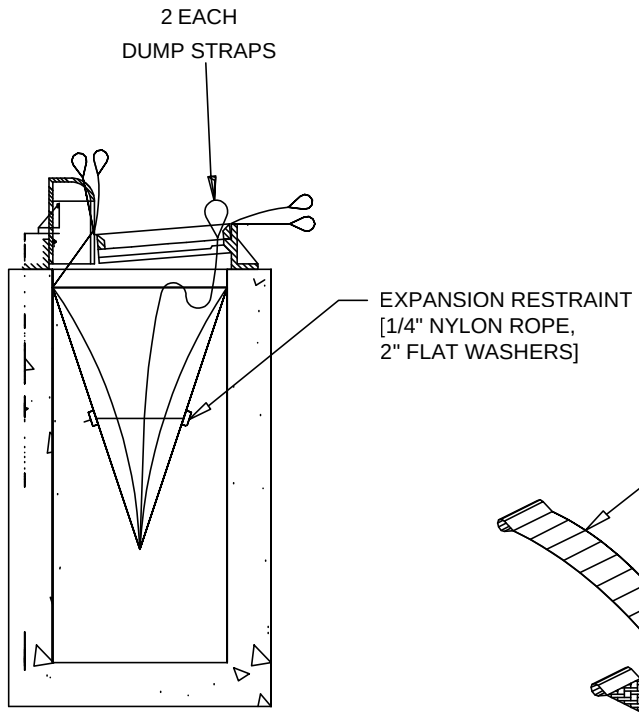

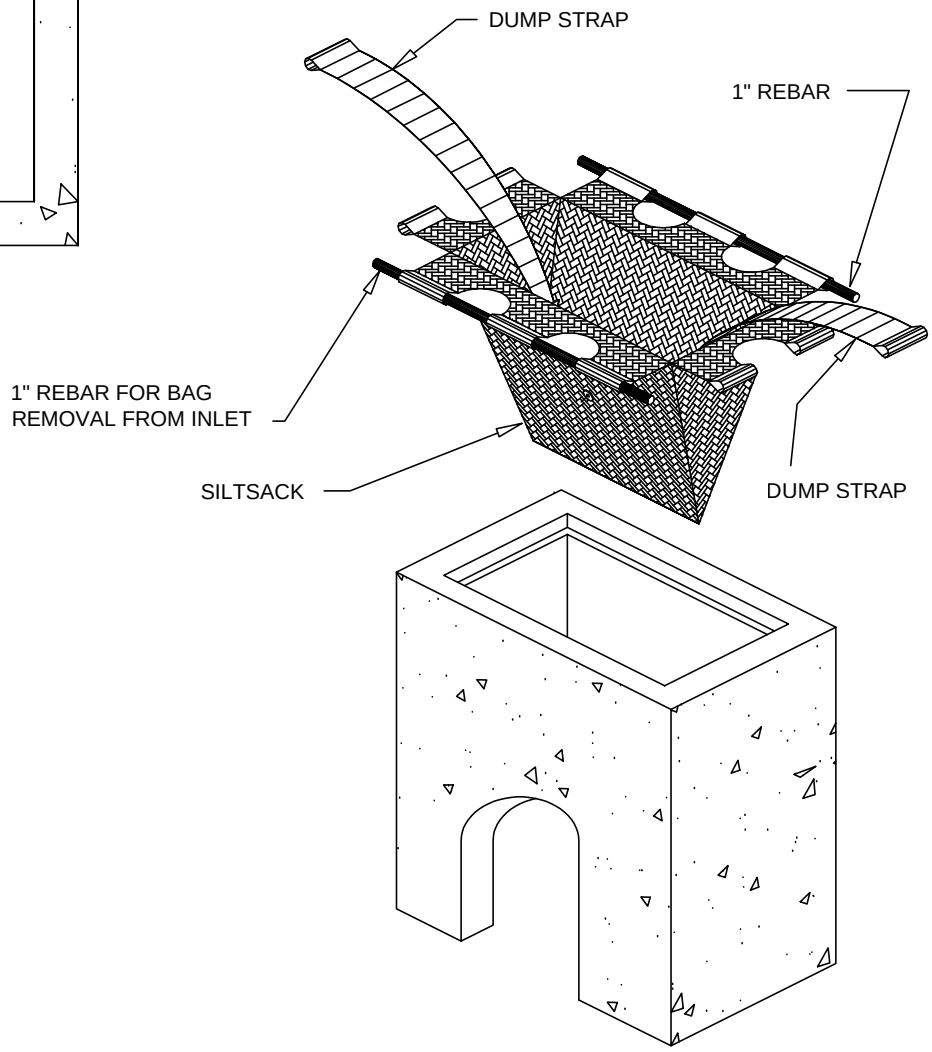

DESIGN:	DATE:	ROSEVILLE	ENGINEERING DEPARTMENT		PLATE NUMBER
DRAWN:		INLET PROTECTION SEDIMENT FILTER SACK			EC-2
REVISIONS					

SEDIMENT FILTER SACK.dwg